CH-103TX
HDMI v1.3 to
CAT6 Transmitter

Operation Manual

CH-103TX

TABLE OF CONTENTS

1. Introduction... 1

2. Main Features.. 1

3. Package Contents... 1

4. Hardware Description.. 1

4.1 Front Panel.. 1

4.2 Rear Panel... 1

5. Connection and Installation... 2

6. Specifications... 3

1. Introduction

This is the transmitter (Tx) unit of HDMI to CAT6 Solution that can extend HDMI digital signal through CAT-6 cables for a distance up to 35 meters at 1080p/10bits. This is compatible to HDMI v1.3 specifications, a cutting-age technology which defines the new lossless compressed (Dolby TrueHD, Dolby Digital Plus and DTS-HD Master Audio) Digital audio, with a bandwidth up to 225MHz. The installation of HDMI to CAT6 is easy and quick, simply place receiver side next to your HDTV source such as a DVD player, then place the transmitter side next to your display or CAT 6 to CAT6 repeater unit and get all necessary cables connected and enjoy.

2. Main Features

- Compliant with HDMI 1.3, HDCP 1.1 and DVI1.1 standards.
- Supports new lossless compressed (Dolby TrueHD, Dolby Digital Plus and DTS-HD Master Audio) Digital audio .
- Supports CAT-5/CAT-5E/CAT-6 cables of variable types.
- Supports equalize and recover incoming TMDS data before re-transmitting them with optimal quality regardless of the incoming signal quality.
- Supports high definition input up to 1080p/10bits, output resolution follows input.
  The distance from source to HDMI receiver side can up to 15 meters (with good quality cable) and the distance from CAT6 transmitter side to receiver unit can up to 35 meters.(Suggest to use CAT-6 cable for better performance)
- Full HDCP compliant.
- Support CEC function.
- Easy to install and simple to operate.

3. Package Contents

- HDMI to CAT6 Transmitter.
- 5V DC power supply adaptor.
- Operation Manual.

4. Operation Controls and Functions

4.1. Front Panel

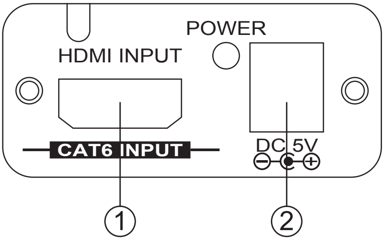

4.2. Rear Panel

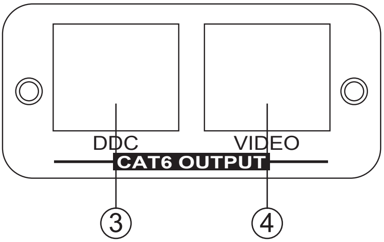

①. HDMI input: Connect the HDMI input port to the HDMI or DVI output of your source equipment such as DVD player or set-top-box.

②. Power: Plug the 5VDC power supply into the unit and connect the adaptor to AC wall outlet.
③. DDC output: Connect the DDC output to the DDC input of the receiver unit using CAT5/CAT-5E/CAT-6 cable.
④. Video output: Connect the video output to the video input of the receiver unit using CAT-5/CAT-5E/CAT-6 cable.

5. Connection and Installation

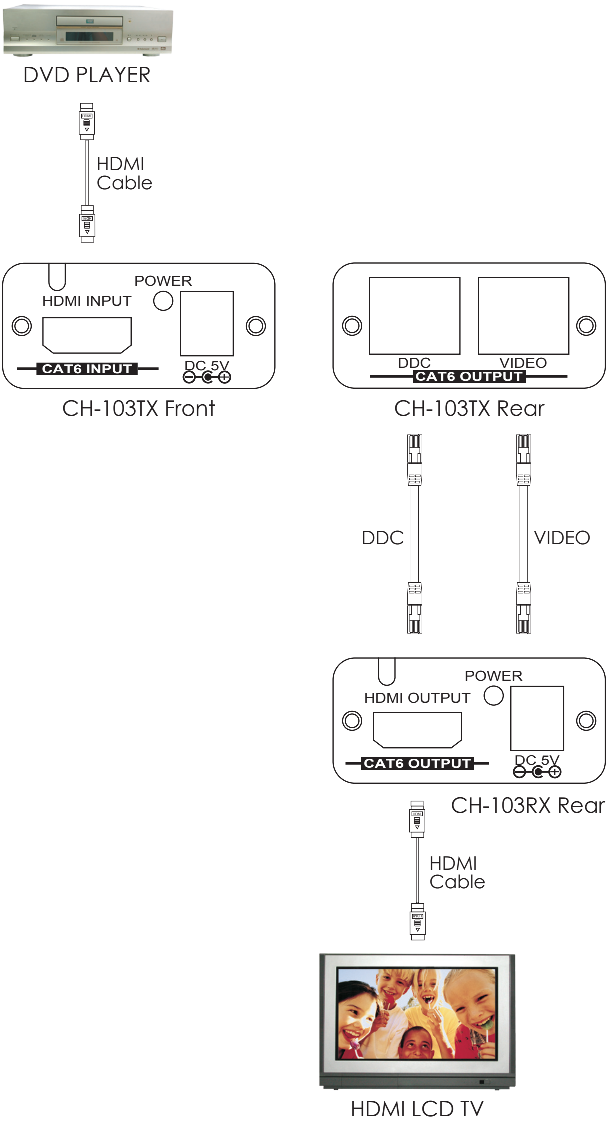

6. *Specifications*

Input port	1 x HDMI
Output ports	1 x CAT-6 for Video, 1 x CAT6 for DDC
Power Supply	5V/2.6A DC (US/EU standards, CE/FCC/UL certified)
Dimensions (mm)	50(W) x 62(D) x 23(H)
Weight(g)	78
Chassis Material	Aluminum
Silk Skin Color	Black
Operating Temperature	Operating from 0°C ~ 48°C

CYPRESS TECHNOLOGY CO., LTD.

Home page: http://www.cypress.com.tw

CH-103RX
HDMI v1.3 to
CAT6 Receiver

Operation Manual

CH-103RX

TABLE OF CONTENTS

1. Introduction..1

2. Main Features... 1

3. Package Contents... 1

4. Hardware Description.. 1

4.1 Front Panel...1

4.2 Rear Panel... 1

5. Connection and Installation..2

6. Specifications.. 3

1. Introduction

This is the Receiver (Rx) unit of CAT6 to HDMI Solution that can receive the digital signal through CAT-6 cables for a distance up to 35 meters at 1080p/10bits. This is compatible to HDMI v1.3 specifications, a cutting-age technology which defines the new lossless compressed (Dolby TrueHD, Dolby Digital Plus and DTS-HD Master Audio) Digital audio, with a bandwidth up to 225MHz. The installation of CAT6 to HDMI is easy and quick, simply place receiver side next to your CAT6 transmitter unit, then place the CAT6 to HDMI transmitter side to your display and get all necessary cables connected and enjoy.

2. Main Features

- Compliant with HDMI 1.3, HDCP 1.1 and DVI1.1 standards.
- Supports new lossless compressed (Dolby TrueHD, Dolby Digital Plus and DTS-HD Master Audio) Digital audio.
- Supports CAT-5/CAT-5E/CAT-6 cables of variable types.
- Supports equalize and recover incoming TMDS data before re-transmitting them with optimal quality regardless of the incoming signal quality.
- Supports high definition input up to 1080p/10bits, output resolution follows input.
  The distance from source to CAT6 receiver side can up to 35 meters (Suggest to use CAT-6 cable for better performance) and the distance from HDMI transmitter side to receiver unit can up to 15 meters (with good quality cable).
- Full HDCP compliant.
- Support CEC function.
- Easy to install and simple to operate.

3. Package Contents

- CAT6 to HDMI Receiver.
- 5V DC power supply adaptor.
- Operation Manual.

4. Operation Controls and Functions

4.1. Front Panel

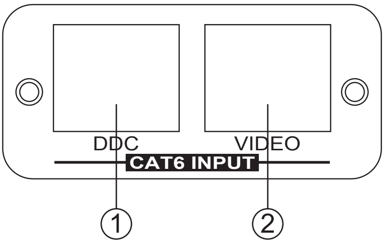

4.2. Rear Panel

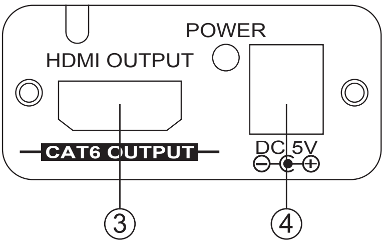

①. Video input: Connect the video input to the video output of the transmitter unit using CAT-5/CAT-5E/CAT-6 cable.

②. DDC input: Connect the DDC input to the DDC output of the transmitter unit using CAT5/CAT-5E/CAT-6 cable.

③. HDMI output: Connect the HDMI output port to the HDMI or DVI input of your display.

④. Power: Plug the 5VDC power supply into the unit and connect the adaptor to AC wall outlet.

5. Connection and Installation

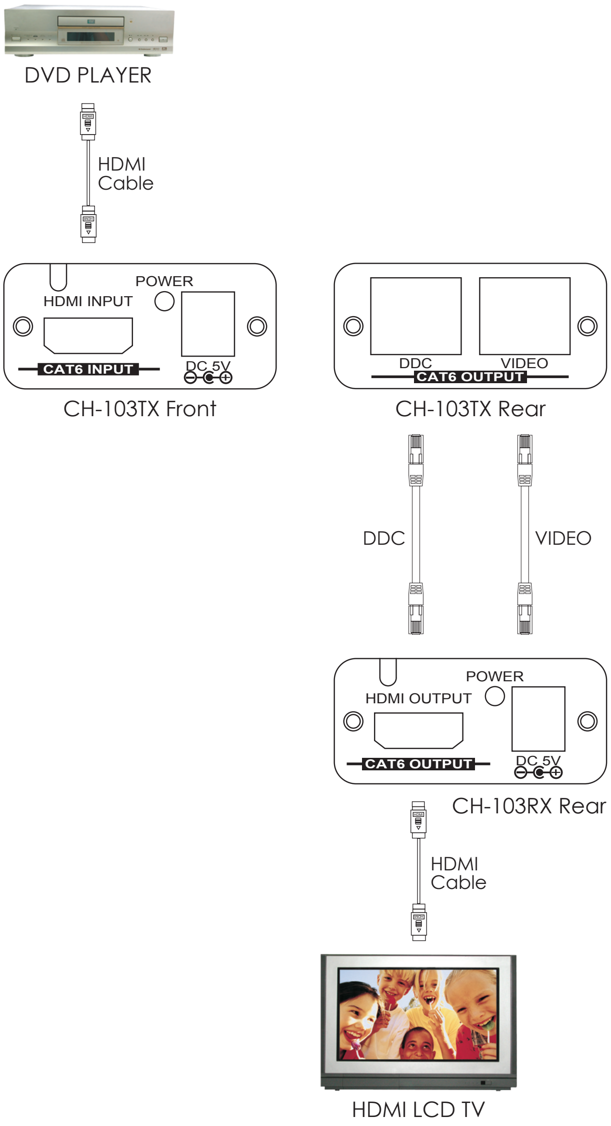

6. *Specifications*

Input ports	1 x CAT-6 for Video, 1 x CAT6 for DDC
Output port	1 x HDMI
Power Supply	5V/2.6A DC (US/EU standards, CE/FCC/UL certified)
Dimensions (mm)	50(W) x 62(D) x 23(H)
Weight(g)	78
Chassis Material	Aluminum
Silk Skin Color	Black
Operating Temperature	Operating from 0°C ~ 48°C

CYPRESS TECHNOLOGY CO., LTD.

Home page: http://www.cypress.com.tw